Abstract

The Towing Tank Upgrade project is to create a wireless data acquisition system for the Naval Architecture Tow Tank laboratory and install a video recording and display system. The 100-foot long tow tank is used by the Coast Guard Academy's (CGA) Naval Architecture and Marine Engineering (NA&ME) cadets and faculty to analyze hull designs. Before this project, the tow tank had not been updated in over twenty years and was in need of modernization for the benefit of the cadets, faculty, and Coast Guard Academy. Using the existing technology of wireless communication and video, sponsor requirements, and other project constraints a design solution was developed. The first part of the system design uses a wireless access point to implement wireless data transfer from a computer at the data collection point to a separate computer workstation. The second part implements cameras at the data collection point, then records and displays the footage on a wall-mounted monitor. The first phase of the design was implemented and tested. The results proved that the first part of the final project meets the requirements of the project sponsor. The second phase of video recording and display is still being tested. The testing of the second phase will be completed by 28 April and is expected to meet all requirements.

Introduction

The Coast Guard Academy has a 100-foot long towing tank that is used by the Naval Architecture and Marine Engineering (NA&ME) cadets and faculty to analyze hull designs. Hull models are pulled through the water while sensors collect data of the hull's performance. The project sponsor, the NA&ME section is refurbishing the tow tank laboratory and has asked the Electrical and Computer Engineering (ECE) section to design a portion of the upgrade. This project will improve the quality of the learning experience for cadets, create adequate facilities for faculty research, and make the NA&ME major a more competitive program compared to programs offered by other academic institutions. The entire project includes fixing leaks, upgrading the carriage drive system, adding new heave and pitch sensors, and the ECE portion: creating a wireless data acquisition system and installing a video recording and display system.

The project was split into two phases. Using modern technology and sponsor requirements, a design solution for each phase was developed. The first phase of the system design uses a wireless access point to implement wireless data transfer from a computer at the data collection point to a separate computer workstation. The second phase implements cameras at the data collection point, records video, and displays the footage on a wall mounted flat screen. The design has been implemented and tested. The test results show that the design meets the project sponsor's requirements.

Background

The Tow Tank wireless data acquisition system and video upgrade installation is to improve the 1985 data transmission technology of the tow tank, which is used to analyze hull designs. It is a 100-foot long ship model towing tank with a carriage mounted on a track that pulls models through the water to collect data on parameters such as, resistance, heave, and pitch. Figure 1 below is a running test in the Coast Guard Academy's tow tank [1]. A cadet is riding the carriage as it pulls a model though the water.

Figure 1: Coast Guard Academy's Towing Tank [1]

Before the project, the tow tank had a large desk-top computer and bulky monitor mounted on the carriage that acquires data from three sensors. The data was converted using an analog-to-digital converter and sent to the computer on the carriage. Then cadets had to wait until after the test was completed to transfer the data from the computer on the carriage to the workstation computer for analysis. They would have to transfer via floppy disk, CD, or a USB storage device. This delay prevented cadets from immediately determining if the test was running correctly. Because the data was asynchronous, users could not correlate the data with what they were seeing in the tow tank. Due to these limitations, NA&ME wanted real-time data transfer from the sensors to the workstation.

Based upon research conducted, the majority of tow tanks in research facilities and other colleges use a spiral cord that uncoils and recoils as the carriage moves along the tracks of the tow tank [1] – [4]. A cord method is used at the University of New Orleans towing tank [2]. The cord is highlighted by the red circle, on the right hand side of Figure 2 below.

Figure 2: University of New Orleans Towing Tank [2]

The wire connection provides data transfer in real time. Oceanic Consulting Corporation, a world leader in the testing and research of marine engineering designs, successfully uses the cord method on one towing tank and also successfully uses wireless data transfer for another [3]. The cord method was used in the Academy's tow tank unsuccessfully because the data, for some reason, was being incorrectly received at the workstation computer. To eliminate the problem, the cord was removed. Instead, tests were run with no direct connection and data was transferred after the tests were completed.

Before the project, tests were not video recorded. Cadets could not simultaneously correlate the numerical data with an image of the experiment unless they were looking into the tow tank. They also could not view the experiment again. Cadets would benefit from visually

reviewing the experiments to understand their data without repeating the entire experiment. Video recording allows for later evaluation of the bow and stern wave and the wave train generated by the model. Video is essential for evaluation of hull design as it is correlated with resistance, heave, and pitch data for a complete picture of the hull design. Based upon research conducted, the majority of tow tanks use a photo or video system [1]-[4]. Cadets can capture useful video of the tests with installed video cameras.

Modern technology is available to bring the tow tank up to date. The latest technology allows wireless data transfer with an access point or point-to-point connection. An access point connects wireless communication devices by forming a wireless network. A point-to-point wireless connection communicates from one computer directly to another without going through a network. An access point provides coverage by sending and receiving radio wave signals through antennas. Some materials and other signals in the area may cause interference. The radio waves can limited by reducing the maximum transmit power of 100 mW from the access point [5], [6]. A wireless card is a piece of hardware that is built into modern computers but can also be purchased separately. It is a device that allows communication from a computer to a wireless access point. The Institute for Electrical and Electronics Engineers (IEEE) is a worldwide professional organization for the advancement of electrical and computer engineering [7]. IEEE 802.11g is a version of a communication standard that is set by IEEE to regulate wireless transmissions to keep standardization and to maintain fluid communication. This communication standard has a maximum data transfer rate of 54 Mbits/s on a 2.4 GHz band and reaching approximately 38 meters [5]. Video data can also be sent wirelessly via these methods and equipment. Internet protocol (IP) cameras are cameras that have an Ethernet connection.

These cameras have the ability to connect directly to the internet using internet protocols and standards.

Objective

The NA&ME section needs a wireless real-time data acquisition system and a video recording system that displays the tests on a wall-mounted monitor. The upgrade of the tow tank will enhance the education of NA&ME students and faculty. The video reviewing will allow for better correlation of numerical and visual data thus providing a better understanding for students. It will expose cadets to newer technology instead of the existing twenty-two year old technology. The improvements will make the CGA's NA&ME program of study competitive with other colleges and for Coast Guard contracted work. Lastly, it will provide faculty with research opportunities. A state-of-the-art tow tank can be used as a good advertising point for the Academy's NA&ME section and Academy Engineering in general. A more detailed explanation and justification of the project can be found in the project Business Case, Appendix A.

The Requirements Document (Appendix B) explains that the NA&ME section needs the workstation computer to connect to the Academy's network (.edu network) and that the data and video be available on the .edu network. The .edu network, "is primarily used by the cadets and faculty in support of academic studies" and is managed by the CGA's Information Services (IS) division [8]. Connecting to the .edu network and working with IS presents constraints to the project design. IS has regulations and protocol that define what can be done on the network, what hardware and software can be used, and what types of wireless communication can be used. The "CGA WiFi Policy" defined by IS is derived from the Acceptable Use Policy, the need for keeping the network manageable, and the need for security purposes [9]. IS does not allow any point-to-point wireless connections on the network because they are extremely susceptible to

security breaches. Due to the standardization of their network design and equipment, IS has a list of Approved Wireless Networking Equipment, which requires the use of a specific wireless access point, the Cisco Aironet IOS 1231 [10]. This access point communicates via the 802.11g communication standard set by IEEE. IS also requires that the Cisco SMARTnet maintenance system be purchased annually [10]. The Support Plan (Appendix C) provides supplemental justification for the need for SMARTnet and a full explanation of what it provides. IS defines the security methods and that the access point will connect to the .edu network via the switch cabinet in McAllister room 217.

The Requirements Document continues to explain that the access point must reach the entire 100-foot long tow tank without interference from materials or other radio waves. Three video cameras are required to capture video of the bow, beam, and stern so students can observe wave and water inaction with the models. The cameras do not need to capture audio. Three sets or channels of numerical data plus three sets of video must be able to travel wirelessly in real time. NA&ME defined real time as within one second. To achieve real time, all of the data must transfer under a rate of 54 MB/s on a 2.4 GHz band due to the limitations of the 802.11g communication standard. The video must be displayed on a wall-mounted, flat screen monitor that fits within a three by four foot area.

System Design

Using the background, objectives, system requirements, and constraints, a system was designed for each phase of the project. First, a data acquisition system from sensors to a student workstation computer next to the tow tank was constructed. Secondly, a video-recording system that displays the tests in real time on a wall-mounted monitor and records video for later use was built and implemented. From the two possible wireless communication solutions, a point-to-

point connection or a wireless access point, the latter was chosen. As previously explained as a requirement in the Objective section, the stationary computer needs to be connected to the Academy's .edu network. Therefore the design has to adhere to IS's requirement of the Cisco Aironet IOS 1231 access point for wireless communication. The access point will connect to the .edu network via a switch in 217 McAllister Hall, which then will connect to the server in the same room. The connection from sensors through the carriage computer, access point, to the network, and to the workstation computer and display monitor is depicted in Figure 3 on the following page. The connection from the video cameras to an access point set in repeater mode, to the access point in the ceiling, to the network, workstation computer and monitor is also displayed in Figure 3.

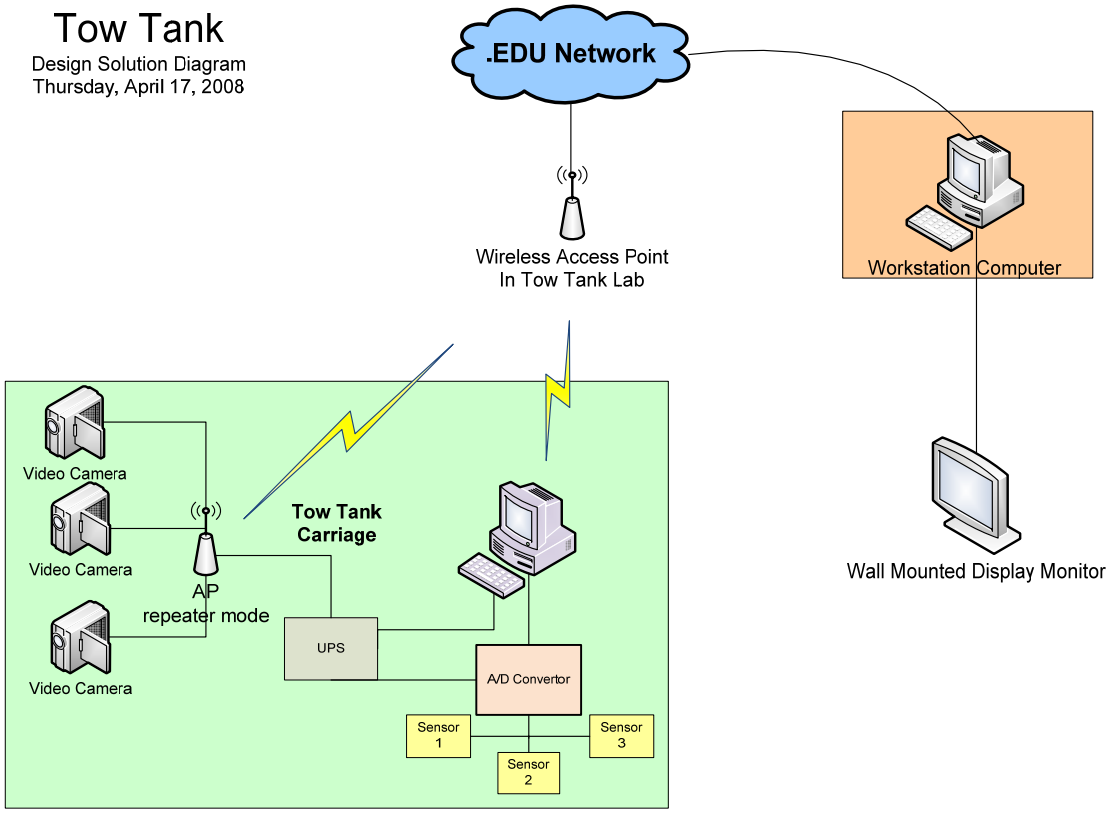

Figure 3: Design Solution Diagram

The access point is installed in the center of the ceiling to provide coverage to the entire tow tank laboratory without interference. Signal strength clarity is optimal because there are no physical obstructions between the center of the ceiling and the stationary computer or any point the carriage laptop computer could be along the tow tank. To ensure there is limited interference IS sets all of the access points around campus to reach only the necessary zones. The transmit power of this access point is set strong enough to reach the entire laboratory. It unintentionally reaches some other parts of McAllister Hall but it is less than maximum transmit power of 100 mW so it is not radiating outside to other buildings. The only location in the laboratory that does not have a signal is directly below the antennas because they do not radiate directly vertically [11]. This void does not affect the design because the access point does not need to communicate to anything directly underneath it.

The access point receives power from the .edu network switch equipped with Power over Ethernet (PoE), which allows for Ethernet cables to provide power while normally transmitting data [12]. PoE is more convenient and less expensive to use than installing a power line to reach the power point. The Ethernet cable connects to the switch in 217 McAllister. The access point's interaction with the network and security was set and will continued to be managed by IS.

The sensors will collect hull resistance, heave, and pitch. The sensors connect to an analog to digital convertor on the carriage that also supplies power to the sensors to trigger their recording. The convertor receives its power from the uninterrupted power source (UPS) on the carriage. The analog to digital convertor then connects to the computer on the carriage. The carriage computer had a wireless card in it that allows it to transfer information via the 802.11g communication standard to the wireless access point in the center of the ceiling in the tow tank

laboratory. The computer is powered by the UPS. The green block of the diagram above displays all that is on the moving carriage.

Three Arecont AV2100 cameras were chosen because they are IP cameras that connect directly to the internet or local area network, such as the .edu network. Connecting the cameras directly to the .edu network cuts down on processing time because the video data will only have to go through one computer instead of through two on its way to the flat screen monitor. This decision was made because of the real-time video requirement of less than one second. Other cameras that can plug into the carriage computer were considered but not chosen. Those cameras require a Firewire connection, which the computer did not have and would have been an additional purchase. The other cameras available also had USB connections, which could have had delay due to queuing with three video streams plus numerical data coming into the computer. IP cameras were the best choice as shown in Table 1 below.

Table 1: Camera Decision Matrix

Camera	AV3100	AV2100	NetCam SC5	MP2A	FO124TB/TC	FO234SB/SC
HD?	Yes	Yes	Yes	Yes	No	No
Price	$1,000	$895		$875	$700	<1000
Mpixels	3Mp	2Mp	up to 5Mp	2Mp		
Resolution	1920x1080 or lower	1600x1200 or lower		1600x1200	659x494 VGA	782x582
Frame Rate	22 fps or lower	24 fps or lower		24fps	60 or lower fps	63 or lower fps
BandWidth	too HIGH	too HIGH	too HIGH	too HIGH		
Weight	1lb	1lb		1lb		
Power	POE	POE	POE or 12V DC	POE or 9-12VDC	POE or 9-12V DC	POE or 9-12V DC
software	$95	$95			free (compatible w/ labview)	free (compatible w/ labview)
Lens	$100-200	$100-200	comes w/ lens	$80-200		
mounting kit	$15	$15		15	included	included
Connection	IP	IP	FIrewire/USB	Firewire/USB	Firewire	Firewire
total Pice estimate	>1200	$1,200		$1,200		

Per the requirements, the three video cameras were mounted on the carriage frame to capture video of the bow, stern, and a beam. They were attached to the carriage with adjustable, swivel clamps. These brackets were chosen so the cameras can be clamped to any point around the carriage to capture any view of the bow. The cameras were adjustable so they can be tilted in different directions to capture ideal views.

They are connected to the Linksys SVR200 wireless access point on the carriage via Ethernet cables. Using an Ethernet connection prevents a queuing delay because an Ethernet connection has the ability to keep data flowing in different channels at the same rate. The access point provides power to the cameras via POE and is set in repeater mode to send the data from the video cameras to the access point in the ceiling via the 802.11g communication standard. Repeater mode means that the Linksys access point does not connect directly to the network,

rather it wirelessly repeats the information to the Cisco access point. The Linksys access point receives power from the UPS on carriage. A Linksys SVR200 wireless access point that provides POE via four ports was chosen to connect the cameras. It was the best solution because it can provide power to the cameras and connect them to the internet. This is less expensive than having a POE switch to provide power and a standard access point to provide internet connection. It also simplifies the amount of components in the design.

The workstation computer is connected to the .edu network via an Ethernet cable. From the workstation computer, one can control the cameras. The tests are run by remotely logging onto the computer on the carriage from the workstation computer. LabView is the software used to operate tests in the towing tank.

A Samsung 52 inch flat screen monitor was chosen by the project sponsor. They chose it based on size, compatibility with a computer, and budget constraints. The flat screen monitor is hardwired with a monitor cable to the workstation computer and displays that screen on the back wall of the tow tank laboratory.

Results

The first phase of the design has been implemented and tested. The second phase of the design has been implemented and still needs to be tested. The Test Plan can be Found in Appendix E. The first test performed determined that the workstation computer does connect to the .edu network. The workstation computer successfully logs on with a .edu network username and password. A user can save and retrieve a file to and from the .edu network.

The second test performed determined that there is wireless connectivity from the computers to the access point. Both computers were turned on. The workstation computer was logged onto and the

carriage computer was remotely logged onto. There was constant connectivity as the carriage was moved down and back along the track.

The rest of the requirements will be tested Monday 28 April. These tests will determine if the results meet of the second phase requirements of the project. The tests will also determine the real-time data and video transfer. Real-time data transfer has not been tested because video transfer will affect the data transfer rate.

Conclusions

Previously, the tow tank technology had not been updated in over twenty years, therefore NA&ME had a great need to improve the facility. The Electrical Engineering portion of the upgrade created a wireless data acquisition system for the tow tank laboratory and installed a video recording and display system. Using modern technology and sponsor requirements, a design solution was developed. The first part of the system design uses a wireless access point to implement wireless data transfer from a computer at the data collection point to a separate computer workstation. The second part implements IP cameras at the data collection point, records and displays the footage. The first phase of the design was implemented and tested. The results proved that the first part of the final project meets the requirements of the project sponsor. The second phase of video recording and display is still being tested. The testing of the second phase will be completed by 28 April and is expected to meet all requirements.

References

[1] "Naval Architecture and Marine Engineering." United States Coast Guard Academy. 09 Dec. 2007 <http://www.uscga.edu/display.aspx?id=507>.
[2] "UNO Towing Tank." School of Naval Architecture and Marine Engineering. 4 Dec. 2007 <http://www.name.uno.edu/towtank/towtank.aspx>.
[3]Oceanic Consulting Corporation. “Facilities,” 2007 Dec. 04, Available: http://www.oceaniccorp.com/FacilityDetails.asp?id=3
[4] “MIT Towing Tank,” 2007 Dec. 04, Available: http://web.mit.edu/towtank/www/tankpage.html
[5] (2007 Jul). FAQ on Cisco Aironet Wireless Security. Cisco Systems, Inc.

Available: http://www.cisco.com/en/US/tech/tk722/tk809/technologies_q_and_a_item09186a00805e8297.shtml
[6] (2007 Jun). Cisco Aironet Access Point FAQ. Cisco Systems, Inc. 24 Sep. 2007 Available: http://www.cisco.com/en/US/products/hw/wireless/ps430/products_qanda_item09186a008009483e.shtml
[7] "IEEE- The World's Leading Professional Association for the Advancement of Technology," Available: http://www.ieee.org/portal/site
[8] United States Coast Guard Academy. "Information Services: Netowrks," *Webpage*, 2007 Nov. 09, Available: http://www.uscga.edu/display.aspx?id=1101
[9] "CGA WiFi Policy," *Webpage*, 2007 Dec. 07, Available: http://eduportal/sites/wifi/Document%20Library/CGA%20WiFi%20Policy%20draftv3.mht
[10] "CGA Approved Wireless Networking Equipment," 2007 Nov. 09, Available: http://eduportal/sites/wifi/Document%20Library/Approved%20Equipment%20List.htm
[11] W. Gastreich, "How to Avoid Trouble When Setting Up a Wireless Network," *PACE*, vol. 59.2, pp. 23-25, 2006.
[12] What is PoE? (Power over Ethernet). Netgear. Available: http://kbserver.netgear.com/inquira/default.asp?ui_mode=answer&prior_transaction_id=1039787&action_code=5&highlight_info=16777339,9,12&turl=http%3A%2F%2Fkbserver.netgear.com%2Fkb_web_files%2FN101556.asp&answer_id=7769808#__highlight

Bibliography

[1] J. Kurose and K. Ross, *Computer Networking: A Top Down Approach Featuring the Internet*, Boston, Pearson-Education, 2005.
[2] Lee, Heung Ki, Varrian Hall, Ki Hwan Yum, Kyoung Ill Kim, and Eun Jung Kim. "Bandwidth Estimation in Wireless LANS for Multimedia Streaming Services," in *IEEE International Conference on Multimedia and Expo, ICME 2006 – Proceedings*, 2006, pp. 1181-1184.

Appendices

[A] Business Case

[B] Requirements Document

[C] Support Plan

[D] Project Management Plan

[E] Test Plan

[F] Design Specification