DGPS Antenna Site Modeling

1/c Chris Dufresne

Project Advisor: Dr. McKaughan

Projects in Electrical & Computer Engineering
United States Coast Guard Academy
May 2003

DGPS Antenna Site Modeling

1/c Chris Dufresne

Project Advisor: Dr. McKaughan

Projects in Electrical & Computer Engineering
United States Coast Guard Academy
May 2003

ABSTRACT

The Differential Global Positioning System (GPS) currently used by the Coast Guard has been in full operation since 1998 but has experienced numerous problems with coverage and reliability. In order to resolve these coverage and reliability problems the Coast Guard must build new DGPS sites and improve the efficiency of other DGPS sites. My senior design project will entail different projects designed to increase the efficiency and reliability of existing DGPS sites. This was first tackled by a study into the bandwidth of just an antenna. The results from this bandwidth study showed the bandwidth of the antenna itself is very wide and thus does not limit the bandwidth and reliability of an antenna site. These results led to a new design of the existing coupler used at various antenna sites. This new coupler used a variable capacitor and inductor to change the characteristics of the antenna system to keep a wide bandwidth. The testing of this coupler proved that the coupler does increase the bandwidth of the antenna system though more testing of the coupler is required. Modeling of the 90' DGPS antenna at Point Loma, CA was also done to find the Top Loading Element (TLE) that would increase the efficiency and bandwidth of the antenna system. Modeling was done using the Numerical Electromagnetic Code computer program. The results from these models show that the highest efficiency is obtained between TLE lengths of 30 and 60 feet. The length of the TLEs was shown to not have any effect on the bandwidth of the antenna system. Problems did occur in the NEC models when early results showed negative input impedance. These problems were overcame by changing the characteristics of the ground system and adding a short, thin piece of wire to the top of the antenna tower. More NEC modeling does need to be done of other 90' towers. These projects will further augment the already important DGPS system.

INTRODUCTION

One major problem with many of the Coast Guard's antenna sites is that the weather greatly inhibits the DGPS antennas. The DGPS antenna characteristics fluctuate greatly depending on the level of moisture in the air, ground characteristics, and weather conditions. The Coast Guard Radio Frequency Working Group has tasked the USCG Academy Department of Engineering with studying DGPS antenna configurations using computer modeling techniques. The computer modeling software we will be using is the GNEC© program.

The GNEC© program is modeling software developed by Nittany Scientific for antenna modeling. This program uses Numerical Electromagnetics Code (NEC) as the calculating engine to model the antennas. The NEC model uses an integral equation method of moment solutions based on Maxwell's equation. The antenna model is made by building a three-dimensional model of the antenna using vectors. These vectors can either be wires connected to the antenna or the actual antenna structure. GNEC© takes these inputs and creates an output file specifying the antenna's characteristics.

Work on studying DGPS antennas has been done by former cadets Sean Katz and Jonathan Young. Mr. Katz's work mainly dealt with the DGPS antenna at Kenai, Alaska and used the GNEC© software to evaluate the ground system for that site. The results of the GNEC© model were then compared to the actual ground system to evaluate how well GNEC© could model antenna ground systems. Mr. Young's project involved a parametric study of several possible antenna configurations. He used the GNEC© software to study different combinations of towers and top loading elements (TLE). My project expanded on Mr. Young's project by modeling the 90' DGPS antenna at Point Loma, CA. I also completed work on a new coupler for DGPS sites in conjunction with 1/c Zvonimir Knezivic.

OBJECTIVE

The overall objective of my project was to design a more efficient and available antenna system for DGPS. The Radio Frequency (RF) Workgroup, a team of Coast Guard personnel working on the improvement of Coast Guard antenna systems, determined that the two objectives for improved DGPS antenna systems were upgraded bandwidth and efficiency of DGPS antenna systems.

Improved bandwidth was deemed to be an objective of my project because of its relationship with maintaining continuous transmission of an antenna system. An antenna system can best be described as a band-pass filter, with the pass band at the signal frequency that the antenna system is supposed to transmit. Bandwidth is the size of the pass band, in essence how many different frequencies the antenna system will broadcast. Unfortunately the pass band will move due to changes in the ground system, effectively moving the signal frequency from the pass band to the stop band. These changes in the ground system are the result of differing weather conditions. Since the changes in what frequency the pass band is located cannot be changed, the size, or bandwidth, of the pass band must be changed. Therefore, a wide bandwidth is desirable in any DGPS antenna system.

The efficiency of an antenna system was deemed an important objective because of cost effectiveness. The definition of efficiency of an antenna system is the ratio of the power radiated by the antenna system versus the power inputted into the antenna system. If an antenna system is inefficient then a lot of power will be needed in order to get only minimal antenna radiation. As a result, an efficient antenna is highly desirable.

SYSTEM DESIGN

Bandwidth Study

In order to meet the objective of an antenna system with more bandwidth, it was determined that a study of the bandwidth of just the antenna itself had to initiated. In order to accomplish this a scaled model of a 110 foot antenna was constructed along with a GNEC© model. The results from the scaled antenna were to be compared to the GNEC© models to make sure reasonable answers for bandwidth were being obtained. The scaled model was a model of an antenna that transmitted from 285 to 315 kHz. Since our project advisor, Dr. McKaughan, had permission to transmit at a frequency of 4 MHz, a scaling factor of 12.3 was determined. The frequency that an antenna can transmit at is related to the size of the antenna. The smaller the size of the antenna, the larger the frequency at which the antenna can broadcast. As a result, the scaled model was expected to get results similar to the actual 110-foot antenna.

The antenna itself was made of ½ inch copper tubing with a height of 9 feet. The antenna was attached to a ground system of 32 thin copper radials by a 5-inch piece of plastic material. An inductor was put in series with the antenna to match the antenna with the transmitter. The test plan for measuring the bandwidth of the antenna was to connect a receiving antenna to a spectrum analyzer and determine bandwidth from the frequency response of the output of the antenna. The bandwidth study provided results which led to the next focus of RF Workgroup, the coupler.

Coupler

From the results of the bandwidth study, it was determined that the antenna itself was not limiting the bandwidth but the coupler. A coupler matches the antenna to the transmitter. This means that the coupler keeps the antenna tuned to 50+j0 ohms. Essentially the antenna and coupler, in series, must have 50 ohms real resistance along with 0 ohms of reactive resistance. If the coupler and antenna do not meet these resistance conditions the pass band of the antenna system will move, in effect causing the site to go off air. From the results of the bandwidth study, it was determined that the bandwidth of just the antenna is in fact very wide. It is rather the coupler which limits the bandwidth of the antenna system. Unfortunately because weather is changing the pass band of the antenna system either a coupler with wide bandwidth is needed or a coupler which can change its resistance values. The later solution is currently being used in which a variable inductor along with a constant resistor is used. The inductor uses a series of taps to "step" from one value of inductance to another. This coupler also used a transformer to scale up the voltage in the coupler itself. This caused problems when the coupler was used with a 1,000W transmitter since this would induce over 30,000V in the coupler causing the coupler to catch fire. A schematic of this coupler is in Figure 1:

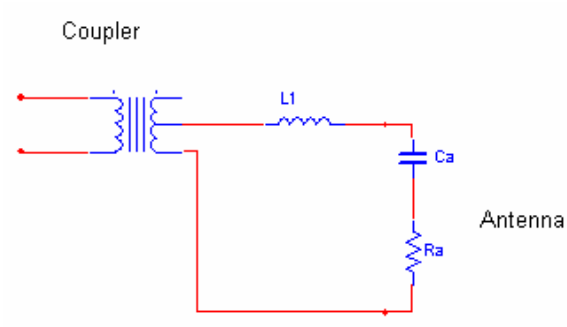

Figure 1: First coupler Schematic

Problems with coupler also involved the sensitivity of the variable inductor. The variable inductor had large steps which in some cases caused the coupler to over or under estimate the amount of inductance needed to match the antenna. A new coupler was created which shelved the idea of a transformer and allowed for greater control of inductance with a variable inductor as well as a variable capacitor which can be used to fine tune the right amount of reactive resistance. Figure 2 is a schematic of the new coupler design.

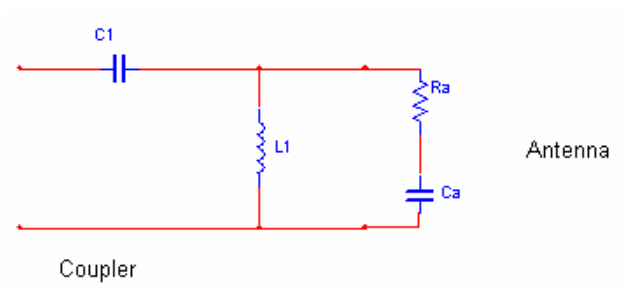

Figure 2: Second Coupler Schematic

Point Loma Models

In building the DGPS system, the Coast Guard has used a number of different antenna system configurations. One such configuration that has been the source of numerous problems is 90-foot antenna configuration. As a result, of community, environmental, and cost concerns the Coast Guard built DGPS antennas that were much too short to transmit at the desired frequency. While these antennas do work, they have a propensity to frequently go off-line and are inefficient as a result of being much too short. In order to solve this problem TLEs are used which increase the effective height of the antenna. In order to work effectively the top of an antenna tower must be zero when the tower transmits, which is not the case for the 90' tower as a result of being too short. TLEs are able to increase the current at the bottom of the tower. Even though there is still current at the top of the tower it is so small in relation to the current at the bottom that it makes the tower 'seem' to have zero current at the top. This is ideally how TLEs work but TLEs also have been shown to decrease the efficiency of the antenna when they become too long. As a result, I created a number of different antenna model using GNEC© which studied what length is best used for the TLEs.

For my antenna model, I used the tower at Point Loma, CA, which transmitted a frequency of 302 kHz. This tower used a ground system of 120 copper radials, 125 feet long, a wire size of .081 feet, buried underground, and attached to ground steaks. The tower itself was 90 feet tall with a width of 1.5 feet. The length of TLEs I tested are found in Table 1.

Table 1: TLE Lengths Tested

TLE Length (ft)
0
15
30
35
45
60
65
90
120

The widths of the TLEs were .0267 feet and both the TLEs and tower were made of steal. Initially I used ground characteristics that were found in the area; unfortunately this caused an output of negative real input impedance which is impossible. For this reason I used a different ground characteristic, as well as adding a thin piece to the top of the tower. This allowed the tower to be modeled but may have skewed some of the results. These models were then simulated using frequencies of 285, 300, 302, 315, and 330 kHz.

RESULTS

Bandwidth Study

The bandwidth study found less than ideal results. Since a coupler was not used in our scaled model, only the bandwidth of the antenna was measured. The results of these measurements found that by itself the antenna has extremely high bandwidth. Essentially the antenna itself was not limiting the bandwidth and thus was not

the cause of problems with antenna systems going off line. This changed the focus from the antenna itself to the antenna system: the coupler, transmitter, and antenna. A change in the current coupler was needed in order to have better bandwidth.

The NEC models proved to be less than helpful. The results from the NEC models could not be used because of negative real input impedance. Input impedance is what the transmitter 'sees' and should ideally be 50+j0 ohms. Negative real input impedance meant that something in the NEC models was incorrect which means the results were not to be trusted. Ways to work around this problem were found in making the Point Loma models but since our scaled antenna already provided a new direction for the project, the NEC models were disregarded.

Coupler

The new coupler design was tested at C2CEN on March 29, 2003 and proved promising. The coupler was tested on a 90' antenna tower with no transmitter. The characteristics of the antenna were first found and then the values of coupler were tuned so that the antenna system was transmitting at the desired frequency. The results of the coupler are shown in figure 3:

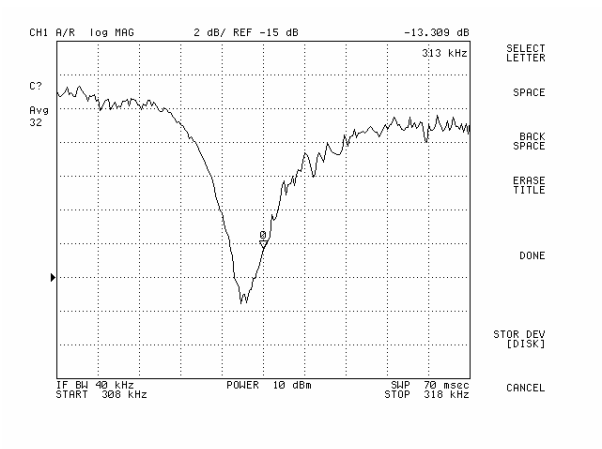

Figure 3: Results of new coupler testing

As shown on figure 3 the coupler could not be tuned precisely to the frequency desired, 313 kHz. The reason this figure shows a notch filter rather than a band pass filter is the Signal Analyzer was measuring the reflection of the power that was inputted into the antenna.

Even though the results from the coupler testing proved positive there are still more tests to be done. In the testing procedure a transmitter was not used, instead the Signal Analyzer sent power through the antenna system and measured the reflected power back. The coupler tested here also lacked an automatic tuning device like the old coupler, which meant that the coupler had to be changed and then reevaluated to see if it met the specifications. Despite these concerns, this coupler design looks promising and will more than likely solve the antenna system problems that the DGPS system was facing.

Point Loma Models

The results from the Point Loma models laid the groundwork for modeling 90' antennas. The efficiency results for models were discovered to favor TLEs with lengths of 30 to 60 feet as shown in figure 4

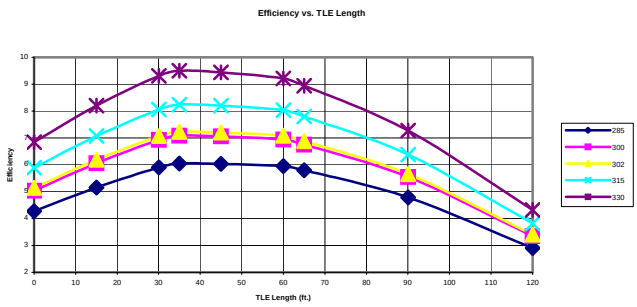

Figure 4: Efficiency results of Point Loma

These results are favorable since it allows a flexible length of TLE to be used depending on the surrounding infrastructure of the antenna site. However, the TLEs do not seem to add much to the efficiency of the antenna and may not be worth the money and manpower to install them.

The results for the bandwidths of the different TLE lengths show no discernable difference in the length of TLE as shown in figure 5:

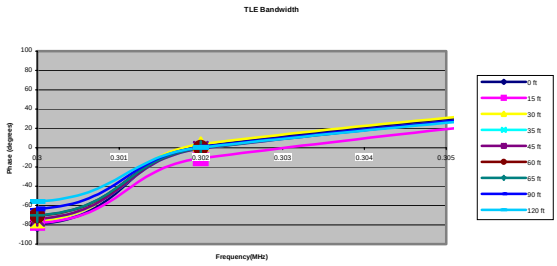

Figure 5: Bandwidth results for Point Loma

The only exception is the 15-foot TLE, which is different due to human error in not matching the antenna correctly. The lengths of the TLEs seem not to affect the bandwidth at all, and should be disregarded as a specification.

Like the NEC models in the bandwidth study, the Point Loma models also had problems with negative input impedance. In order to solve this problem a small thin wire at the top of the tower was used since this was found in Mr. Young's antenna models to eliminate negative real input impedance. The ground characteristics of the antenna were also changed until positive real input impedance was found. Despite these problems the results shown are likely accurate and should allow for a decision on the Point Loma site.

CONCLUSIONS

The DGPS antenna sites still have much work to be done. The new coupler design still needs more testing done, especially with a transmitter. The Point Loma NEC models are finished but there are still other 90' towers that need to be modeled since each site has different ground characteristics, frequency, and site infrastructure.

A better solution to the problem of negative input impedance needs to be found. Changing the ground characteristics and adding a small piece to the tower will most likely not change the results much. Other models may have the same problem and may have their results drastically altered. One example is 1/c Knezivic LORAN/DGPS collocation project where the entire ground plane had to be discarded in order to eliminate negative input impedance. Negative input impedance is a problem that should be investigated further.

The work done on DGPS antennas during this project did accomplish a lot. The antenna itself is no longer the focus of how to increase bandwidth and a new coupler has been created in order to enlarge bandwidth. The Point Loma models showed results that can be used in other models and can be used in a study for adding TLEs to Point Loma. Many of the issues with DGPS are at the point to being solved and these solutions should allow the Coast Guard to augment an already important system.

ACKNOWLEDGEMENTS

The author wishes to acknowledge the contributions of Dr. McKaughan, LT Parsons, LTjg Treib, and the U.S. Coast Guard Command and Control Engineering Center.

REFERENCES

[1] US Coast Guard. (April 1993). *Broadcast Standard for the USCG DGPS Navigation Service (COMDINST M16577.1).* US Coast Guard NAVCEN. [Online] Available: http://www.navcen.uscg.gov/pubs/bcstand/dgpsbst.pdg(URL).

[2] US Coast Guard (July 1995).*DGPS broadcast site GPS antenna installation guidelines and certification standard operating procedure*. US Coast Guard NAVCEN. [Online] Available: http://www.navcen.uscg.gov/pubs/dgps/dgpsant.htm(URL).