Senior Design Project in Electrical & Computer Engineering

Digital VHF Direction Finding System

Cadet 1/c Kevin R. Shmihluk Advisors: CAPT Hartnett & Prof Gross Sponsor: G-AND and R&D CEN

Project Background

The National Distress and Response System Modernization Project (NDRSMP) has requested the Coast Guard Academy to demonstrate next generation VHF-based geolocation capabilities and assess the technical issues associated with this technology. This project will serve to install and demonstrate the capabilities of the digital VHF-DF system by expanding upon a previously designed prototype. Much of this in-depth analysis has been accomplished through a meticulous calibration process.

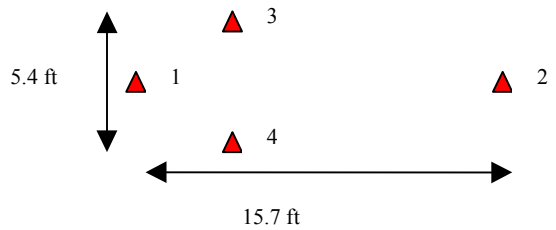

Four-antenna array configuration (top-down view)

The Current Prototype System

This receiver of the current VHF-DF system uses an array of four whip antennas (above) to obtain bearing and eliminate ambiguity. The user interface (bottom right) displays the bearing and relative strength of a VHF-DF transmission, as well as an index of recent transmissions. The prototype receiver (top right) uses analog technology to transform the signal for processing by the digital components. A digital algorithm then compares signal phase differences to produce a bearing. A digital system has many advantages over conventional analog systems. It can detect multiple radio calls from different bearings on the same frequency and record the transmissions for post-analysis. A digital system is also able to steer the antenna beam in software to null out an unwanted signal or home in on weaker or inaudible signals.

Much of last year's work included improving the code to solve a synchronization issue, building an extensive set of calibration and analysis tools, and a lot of testing in the Thames River/I-95 nearby area to gather data.

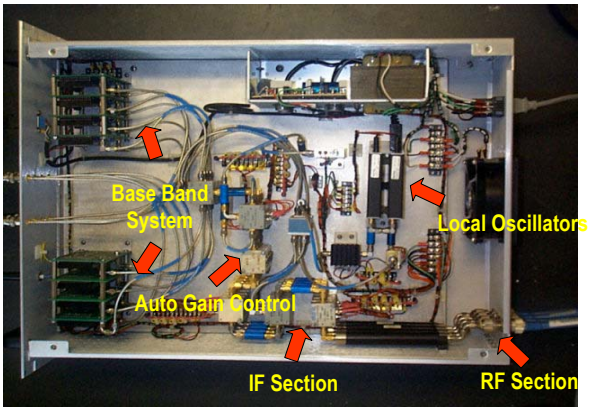

Prototype Digital VHF-DF Receiver

Project Goals

The main goals for this year's project are to determine the best antenna configuration, verify if a cleaner multi-path free environment will improve performance, and look for ways to improve the standard deviations and variance of phase difference estimates through different sampling methods/averaging.

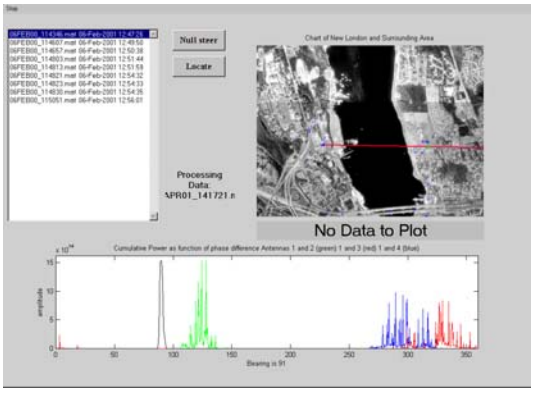

Graphic User Interface (GUI)

Project Plan

This year's work will involve constant testing and comparing of data to choose the best antenna configuration and researching the best testing area to get a clean environment for DF testing.