Senior Design Project in Electrical & Computer Engineering

Digital VHF Direction Finding System

Cadet 1/c Joseph T. Benin Advisors: CAPT Hartnett & Prof Gross Sponsor: G-AND and R&D CEN

Project Goal

The National Distress and Response System Modernization Project (NDRSMP) has requested the Coast Guard Academy to demonstrate next generation VHF-based geolocation capabilities and assess the technical issues associated with this technology. This project will serve to install and demonstrate the capabilities of the digital VHF-DF system by expanding upon a previously designed prototype. Much of this in-depth analysis has been accomplished through a meticulous calibration process. After calibration is complete, the integration of voice analysis software developed by Navy researchers will be incorporated in an effort to battle the growing and costly problem of hoax calls. The long-term goal for this project is to investigate the use of emerging Digital Down Converter (DDC) technology. This may significantly reduce the physical, environmental, and engineering limitations imposed by an analog receiver.

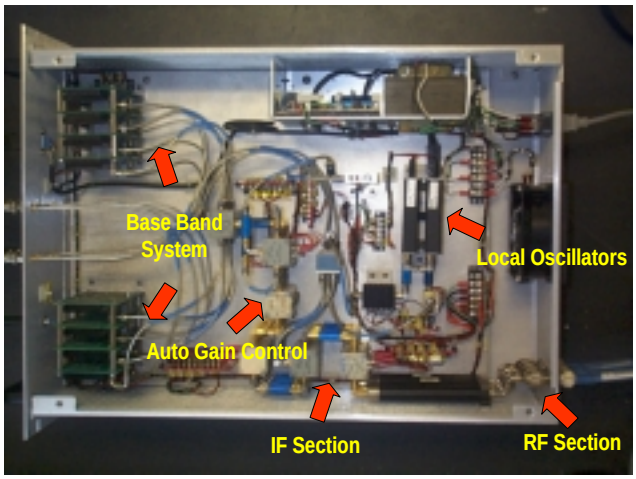

Prototype Digital VHF-DF Receiver

The Current Prototype System

This receiver uses an array of four whip antennas (right) to obtain bearing and eliminate ambiguity. The user interface displays the bearing and relative strength of a VHF-DF transmission, as well as an index of recent transmissions. The prototype receiver (above) uses analog technology to transform the signal for processing by the digital components. A digital algorithm then compares signal phase differences to produce a bearing. A digital system has many advantages over conventional analog systems. It can detect multiple radio calls from different bearings on the same frequency and record the transmissions for post-analysis. A digital system is also able to steer the antenna beam in software to null out an unwanted signal or home in on weaker or inaudible signals.

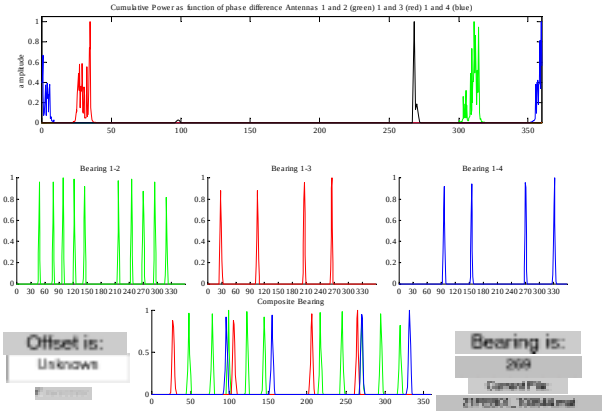

Calibration

Calibration is a critical evolution in the design process of any engineered tool. A large portion of this semester has been dedicated to developing diagnostic interfaces (figure above) and analyzing the resulting data from their use to augment our understanding of what is occurring throughout the system.

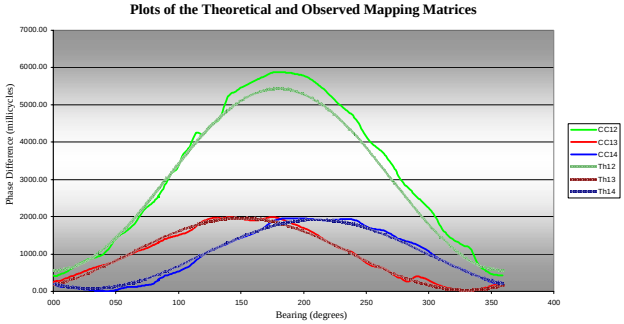

The Matrix

This has resulted in our progress from an "ideal" mapping matrix (from phase difference to bearing), to a more informed one based on actual data that takes into account geographic, physical, electro-magnetic, and other sources of interference. The figure above illustrates the disparity between the ideal curve and one built using a stationary target and rotating the antenna array 360 degrees in 5 degree increments.

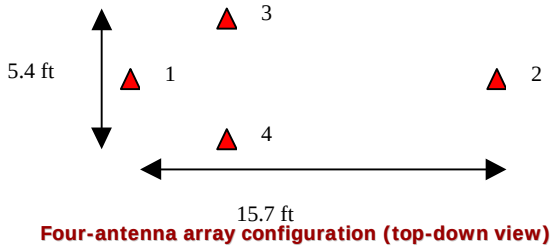

Four-antenna array configuration (top-down view)