Senior Design Project in Electrical and Computer Engineering

Integrated DGPS / LORAN-C Receiver

Cadet 1/c Lee Synkowski Advisors: CAPT Peterson, Prof. Holland, LCDR Bruckner Sponsor: USCG Academy

Project Goal

The goal of this project is to develop a method for integrating DGPS and LORAN-C data to provide a highly accurate, repeatable fix.

Project Background

The Differential Global Positioning System (DGPS) and LORAN-C are two electronic navigation systems widely used by mariners. DGPS is known for its high absolute accuracy, while LORAN is especially valued for its repeatable accuracy. Each system has strengths that can be increased and weaknesses that can be reduced by combining the two together. This also provides added security if one system fails.

Hardware Architecture

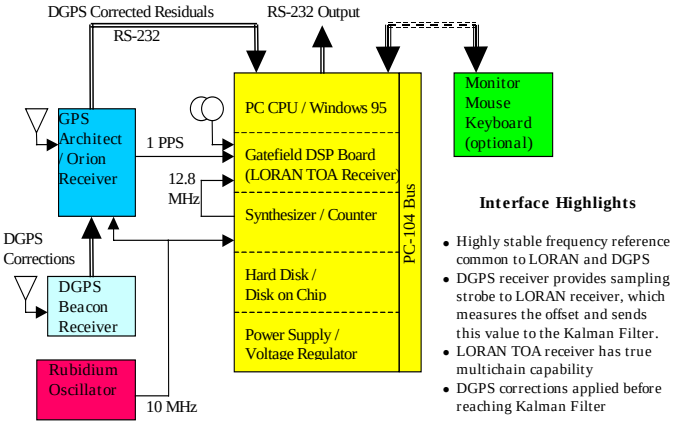

Figure 1

Software Architecture

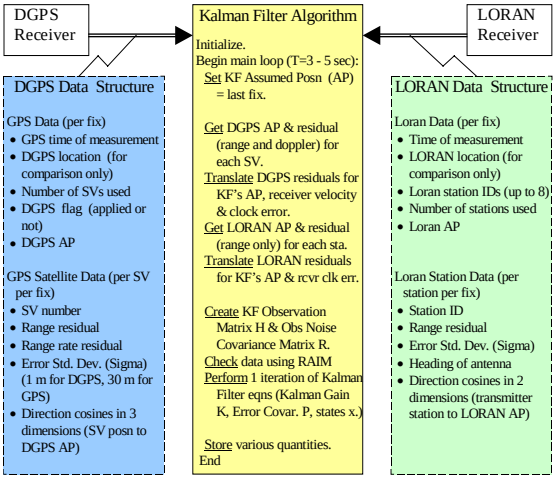

Figure 2

Project Status

The project is in its final phase of development. The integrated receiver computes the fix by means of a Kalman filter. This computer algorithm optimally estimates system states, including position and velocity, using both LORAN and DGPS information. Residuals, the differences between observed and predicted quantities, are transmitted from the two receivers in a compact data structure. The Kalman filter is implemented in C++, whose object-oriented data structures allow for a simple interface between system components.

Figure 1 shows the block diagram illustrating how hardware subsystems interact with each other. Figure 2 shows the software portion of the project, including the Kalman filter.